Maxwell's Equations for Matter

1. Gauss' Law: $\vec{\nabla}\cdot\vec{E} = \frac{\rho_{Tot}}{\epsilon_0} = \frac{\rho_{free}}{\epsilon_0} + \rho_{Bound}$

Now, $\rho_{Bound} = -\vec{\nabla}\cdot\vec{P}$

$$\vec{D} = \epsilon_0\vec{E} + \vec{P}$$

$$\boxed{\vec{\nabla}\cdot\vec{D} = \rho_{free}}$$

No magnetic monopoles

$$\boxed{\vec{\nabla}\cdot\vec{B} = 0}$$

Faraday's Law:

$$\boxed{\vec{\nabla}\times\vec{E} = -\frac{\partial\vec{B}}{\partial t}}$$

Ampere's Law:

$$\vec{\nabla}\times\vec{B} = \mu_0\left(\vec{J}_{Tot} + \vec{J}_D\right)$$

$$= \mu_0\left(\vec{J}^{E}_{free}(\vec{r},t) + \vec{J}^{M}_{Bound}(\vec{r},t) + \vec{J}^{P}_{Bound}(\vec{r},t) + \vec{J}_D(\vec{r},t)\right)$$

$$\vec{J}_D(\vec{r},t) = \epsilon_0\frac{\partial\vec{E}}{\partial t}; \quad \vec{J}^{M}_{Bound} = \vec{\nabla}\times\vec{M}(\vec{r},t)$$

$$\vec{J}^{P}_{Bound} = \frac{\partial\vec{P}(\vec{r},t)}{\partial t}$$

Auxillary Relation

$$\vec{B}(\vec{r},t) = \mu_0 \vec{H}(\vec{r},t) + \vec{M}(\vec{r},t)$$

$$\vec{\nabla} \times \vec{H} = \mu_0 \left(\vec{J}_{free}(\vec{r},t) + \frac{\partial \vec{D}(\vec{r},t)}{\partial t} \right)$$

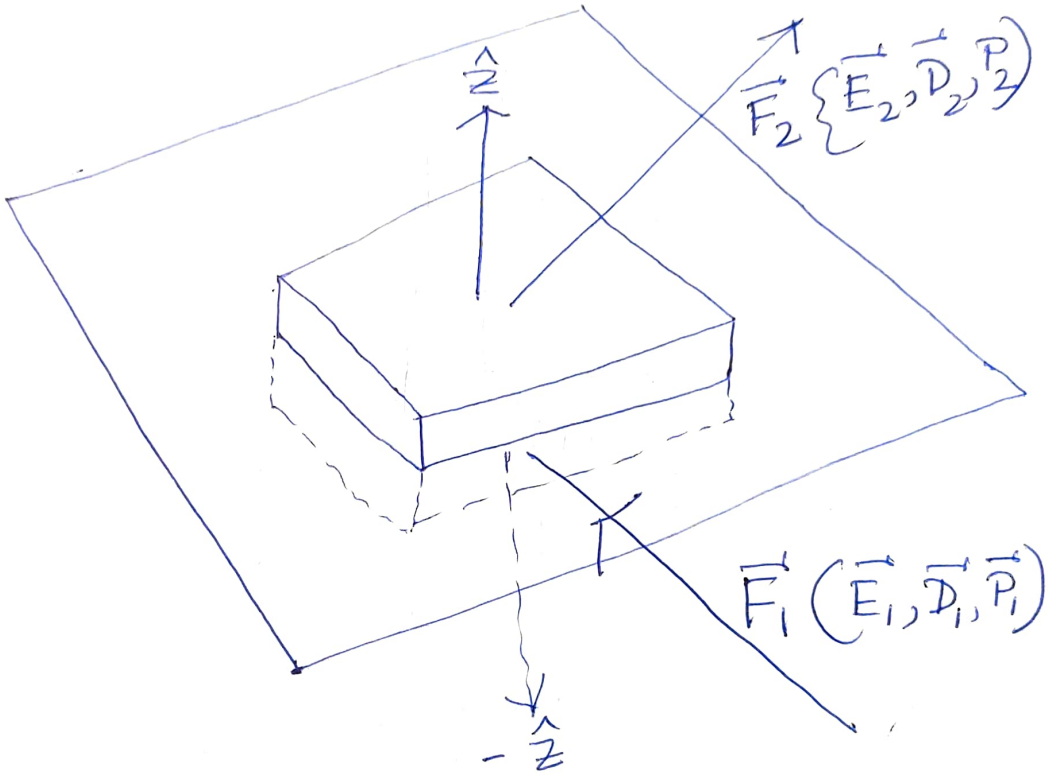

$$\oint_S \vec{E} \cdot \hat{n} \, ds = \frac{Q_{TOT}^{enclosed}}{\epsilon_0} \quad \text{---} \quad (1)$$

We apply the integral form of Gauss' Law at a dielectric interface/boundary using infinitesimally thin Gaussian pillbox slightly into

dielectric material on either side of interface.

Thus, from (1) we obtain

$$E_2^{\perp} A_{Gaussian} - E_1^{\perp} A_{Gauss} = \frac{1}{\epsilon_0} \sigma_{free} A_{Gauss} + \frac{1}{\epsilon_0} \sigma_{Bound} A_{Gauss}$$

$$\Rightarrow E_2^{\perp} - E_1^{\perp} = \frac{\sigma_{Tot}}{\epsilon_0} = \frac{(\sigma_{free} + \sigma_{Bound})}{\epsilon_0}$$

$$\sigma_{Bound} = -(P_2^{\perp} - P_1^{\perp});$$

$$\oint \vec{D} \cdot \hat{n}\, ds = Q_{free}^{enclosed}$$

$$\Rightarrow \boxed{D_2^{\perp} - D_1^{\perp} = \sigma_{free}}$$

(2) Again $\oint_S \vec{B} \cdot \hat{n}\, ds = 0$ --- (2)

$$B_2^{\perp} - B_1^{\perp} = 0 \Rightarrow B_2^{\perp} = B_1^{\perp} \text{ (at interface)}$$

But $\vec{H} = \frac{1}{\mu_0} \vec{B} - \vec{M} \Rightarrow \vec{B} = \mu_0 (\vec{H} + \vec{M})$

Eqn. (2) gives $\oint \vec{B} \cdot \hat{n}\, ds = \mu_0 \oint_S (\vec{H} + \vec{M}) \cdot \hat{n}\, ds = 0$

$$\Rightarrow H_2^{\perp} - H_1^{\perp} = -(M_2^{\perp} - M_1^{\perp}) = -\sigma_{Bo}$$

3) We consider a closed contour C of width l extending slightly (i.e. infinitesimally) into the material on either side of interface

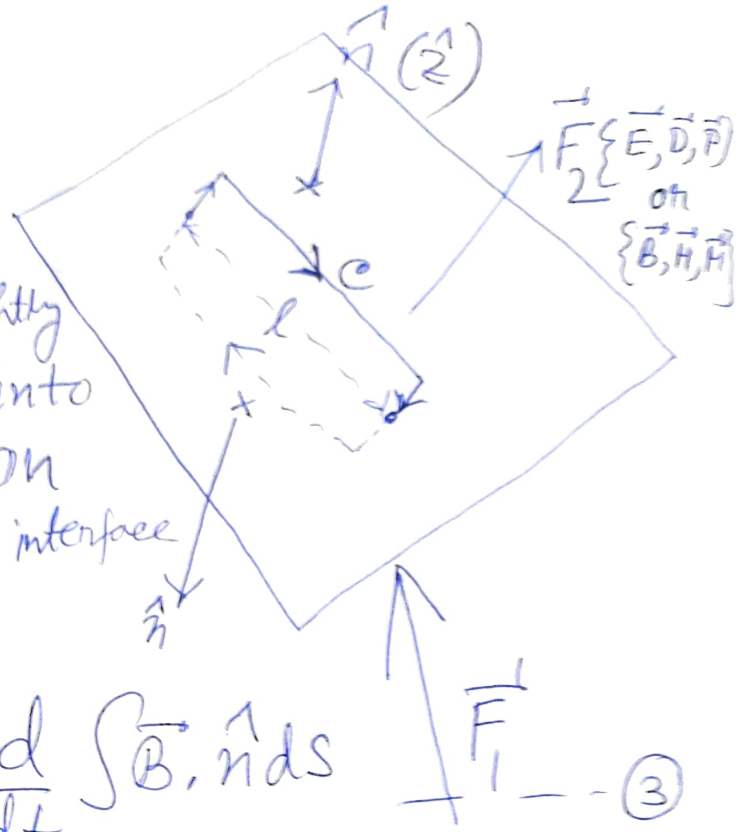

Now,

$$\oint \vec{E} \cdot d\vec{l} = -\frac{d}{dt} \int \vec{B} \cdot \hat{n}\, ds \quad \text{--- (3)}$$

$$\Downarrow$$

$$E_2^{\parallel} l - E_1^{\parallel} l = 0$$ (in the limit area of contour loop $\to 0$ magnetic flux enclosed $= 0$)

$$\boxed{E_2^{\parallel} = E_1^{\parallel}}$$ at interface

Since $\vec{D} = \epsilon_0 \vec{E} + \vec{P} \Rightarrow \epsilon_0 \vec{E} = \vec{D} - \vec{P}$

Thus $$\boxed{D_2^{\parallel} - D_1^{\parallel} = P_2^{\parallel} - P_1^{\parallel}}$$ at interface.

(4) Finally for Maxwell–Ampere's Law

$$\oint \vec{B} \cdot d\vec{l} = \mu_0 \left(I_{TOT}^{encl} + I_D^{encl} \right) \quad \text{--- (4)}$$

I_{TOT}^{encl} = Total current enclosed by the Amperian loop (free current + Bound current + Polarization current)

$$I_D^{encl} = \epsilon_0 \int_S \frac{\partial \vec{E}}{\partial t} \cdot \hat{n}\, ds = \epsilon_0 \frac{d}{dt} \int_S \vec{E} \cdot \hat{n}\, ds$$

$$= \epsilon_0 \frac{d\Phi_E}{dt} \Rightarrow 0$$

($\Phi_E = \int_S \vec{E} \cdot \hat{n}\, ds$ = enclosed flux of electric field lines.)

In the limit the enclosing Amperian loop contour C shrinks to zero height above/below interface, the enclosed area of loop contour $\to 0$ and

$(\hat{n} \times \hat{l})$ normal to the Amperian loop

$$I_D^{encl} \longrightarrow 0$$

Similarly $I_{Bound}^{encl,P} = \int \frac{\partial \vec{P}}{\partial t} \cdot d\vec{S} = \frac{d\Phi_P}{dt} \to 0$

Then from Eq. (4) we have

$$(B_2^{\parallel} - B_1^{\parallel})\, l = \mu_0 \left\{ \left(\vec{K}_{free} + \vec{K}^m_{bound} \right) \times \hat{n} \right\} \cdot d\vec{l}$$

$$\Rightarrow B_2^{\parallel} - B_1^{\parallel} = \mu_0 \left(\vec{K}_f + \vec{K}^m_{bound} \right) \times \hat{n} \cdot \hat{l}$$

So the parallel components of $\vec{B}$ are discontinuous by an amount proportional to free and bound surface current density.

- Thus, for $\vec{H}$, it will be

$$H_2^{\parallel} - H_1^{\parallel} = (\vec{K}_f \times \hat{n}) \cdot \hat{l}$$

Waves on Boundaries

We now apply boundary conditions to an electromagnetic wave incident on a boundary between two different materials.

We shall use the boundary conditions to derive the properties of the reflected and transmitted waves, for a given incident wave.

Consider a monochromatic wave incident at some angle on a boundary. We must consider three waves; the incident wave, the reflected wave and the transmitted wave. The electric field components for these waves can be written (respectively)

$$(1) \quad \begin{cases} \vec{E}_I(\vec{r},t) = \vec{E}_{0I}\, e^{i(\omega_I t - \vec{K}_I \cdot \vec{r})} \\ \vec{E}_R(\vec{r},t) = \vec{E}_{0R}\, e^{i(\omega_R t - \vec{K}_R \cdot \vec{r})} \\ \vec{E}_T(\vec{r},t) = \vec{E}_{0T}\, e^{i(\omega_T t - \vec{K}_T \cdot \vec{r})} \end{cases}$$

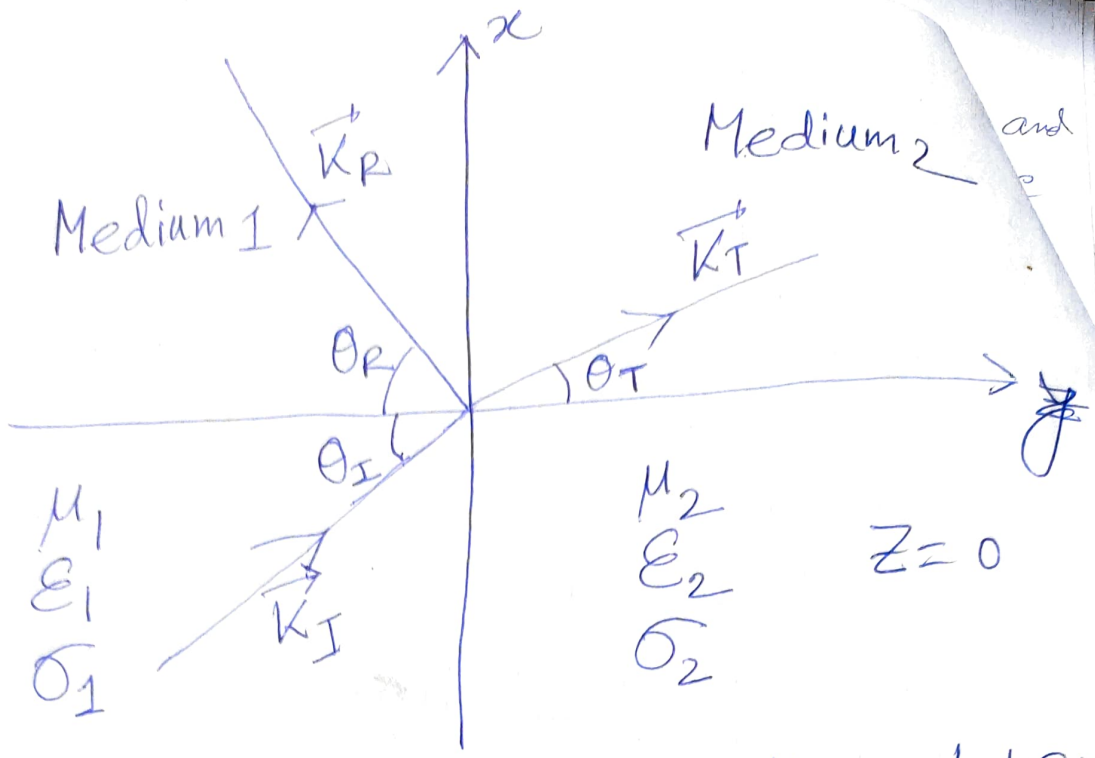

Let us first consider the time dependence of the waves. The boundary conditions must apply at all times. As we know the tangential component of electric field must be continuous at the boundary at all points on the boundary at all times. This implies that all waves must have the same time dependence

Hence, $\boxed{\omega_I = \omega_R = \omega_T = \omega}$.

This means reflection at a boundary cannot change the frequency of an incident monochromatic wave.

(Note: Some surfaces reflect some wavelengths better than others, which is why they can appear coloured under white light: but the frequency of the light does not change.

Su

, we ~~can~~ will find the relationships between the directions in which the waves are moving.

We start from the fact that the boundary conditions must be satisfied at all points on the boundary.

Since ω is same for all! then we ~~can~~ write

$$K_I v_1 = K_R v_1 = K_T v_2 = \omega$$

$$\Rightarrow K_I = K_R = \frac{v_2}{v_1} K_T = \frac{n_1}{n_2} K_T$$

Now, applying the boundary conditions

$$E_1^{\parallel} = E_2^{\parallel} \Rightarrow$$

$$(A)\, e^{i(\vec{K_I}\cdot\vec{r} - \omega t)} + (B)\, e^{i(\vec{K_R}\cdot\vec{r} - \omega t)} = (C)\, e^{i(\vec{K_T}\cdot\vec{r} - \omega t)} \quad \text{at } z=0$$

The important thing to notice that x, y and t dependence is confined to the exponents. Because the boundary conditions must hold at all points on the plane, and for all points and for all times, these

exponential factors must be equal
(Note: a slight change in x would destroy the equality)

The time factors are already equal. Hence

$$\vec{K_I}\cdot\vec{r} = \vec{K_R}\cdot\vec{r} = \vec{K_T}\cdot\vec{r} \quad \text{for } z=0$$

More explicitly

$$x K_{I,x} + y K_{I,y} = x K_{R,x} + y K_{R,y}$$
$$= x K_{T,x} + y K_{T,y}$$

If $x=0$; we get

$$\boxed{K_{I,y} = K_{R,y} = K_{T,y}} \quad \text{--- (2)}$$

If $y=0$; we get

$$\boxed{K_{I,x} = K_{R,x} = K_{T,x}} \quad \text{--- (3)}$$

$$\Downarrow$$

$$K_I \sin\theta_I = K_R \sin\theta_R = K_T \sin\theta_T$$

Now $K_I = K_R$; $\boxed{\theta_I = \theta_R}$

Law of reflection.

Sup

$$\boxed{\frac{\sin\theta_T}{\sin\theta_I} = \frac{K_R}{K_T} = \frac{n_1}{n_2}}$$

$$\Downarrow$$

Snell's Law.

Suppose $Ae^{iax} + Be^{ibx} = Ce^{icx}$ for some nonzero constants $A, B, C, a, b,$ and c and for all x. Prove that $a = b = c$ and $A + B = C$.

<u>Soln:</u> $Ae^{iax} + Be^{ibx} = Ce^{icx}$ ... (1)

This is true for all x; hence plugging $x = 0$ in Eq. (1) we obtain

$$\boxed{A + B = C} \quad \text{---} \quad (2)$$

Differentiating (1) w.r.t. x once we obtain

$$iaAe^{iax} + ibBe^{ibx} = icCe^{icx}$$

$$\Rightarrow x = 0. \quad \boxed{aA + bB = cC} \quad \text{---} \quad (3)$$

Differentiating (1) w.r.t. x twice we obtain

$$-a^2Ae^{iax} - b^2Be^{ibx} = -c^2Ce^{icx}$$

Again putting $a^2A + b^2B = c^2C$

$$= c(cC) = c(aA + bB)$$

$$\cancel{= (A+B)(aA+bB)}$$

$$\cancel{= aA^2 + bAB + aAB + bB^2}$$

$$\Rightarrow \cancel{a^2A - bB^2 + b^2B - aA^2 - AB(a+b) = 0}$$

$$\Rightarrow \cancel{aA(a-b)}$$

hlzheesc

situations involving complex surfaces and
integrating the normal
urface

$$(A+B)(a^2A+b^2B) = (A+B)c(aA+bB)$$

$$\Rightarrow a^2A^2 + b^2AB + a^2AB + b^2B^2 = c(aA+bB)$$

$$= (aA+bB)^2$$

$$= a^2A^2 + b^2B^2 + 2abAB$$

$$\Rightarrow AB(a^2+b^2-2ab) = 0$$

$$\Rightarrow AB(a-b)^2 = 0 \; ; \quad A \neq 0, B \neq 0$$

$$\boxed{a=b}$$

Now $(A+B)e^{iax} = c\,e^{icx}$

$$\Downarrow$$

$$c\,e^{iax} = c\,e^{icx} \; ; \quad \boxed{a=c}$$